Cambridge International AS & A Level

Cambridge International Examinations
Cambridge International Advanced Subsidiary and Advanced Level

CANDIDATE NAME

CENTRE NUMBER

CANDIDATE NUMBER

8585515756

PHYSICS **9702/31**

Paper 3 Advanced Practical Skills 1 **May/June 2017**

2 hours

Candidates answer on the Question Paper.

Additional Materials: As listed in the Confidential Instructions.

READ THESE INSTRUCTIONS FIRST

Write your Centre number, candidate number and name on all the work you hand in.
Write in dark blue or black pen.
You may use an HB pencil for any diagrams or graphs.
Do not use staples, paper clips, glue or correction fluid.
DO **NOT** WRITE IN ANY BARCODES.

Answer **both** questions.
You will be allowed to work with the apparatus for a maximum of one hour for each question.
You are expected to record all your observations as soon as these observations are made, and to plan the presentation of the records so that it is not necessary to make a fair copy of them.
You are reminded of the need for good English and clear presentation in your answers.

Electronic calculators may be used.
You may lose marks if you do not show your working or if you do not use appropriate units.

Additional answer paper and graph paper should be used only if it becomes necessary to do so.

At the end of the examination, fasten all your work securely together.
The number of marks is given in brackets [ ] at the end of each question or part question.

For Examiner's Use	
1	
2	
Total	

This document consists of **12** printed pages.

© UCLES 2017

CAMBRIDGE International Examinations

You may not need to use all of the materials provided.

1 In this experiment, you will investigate an electrical circuit.

(a) Set up the circuit shown in Fig. 1.1.

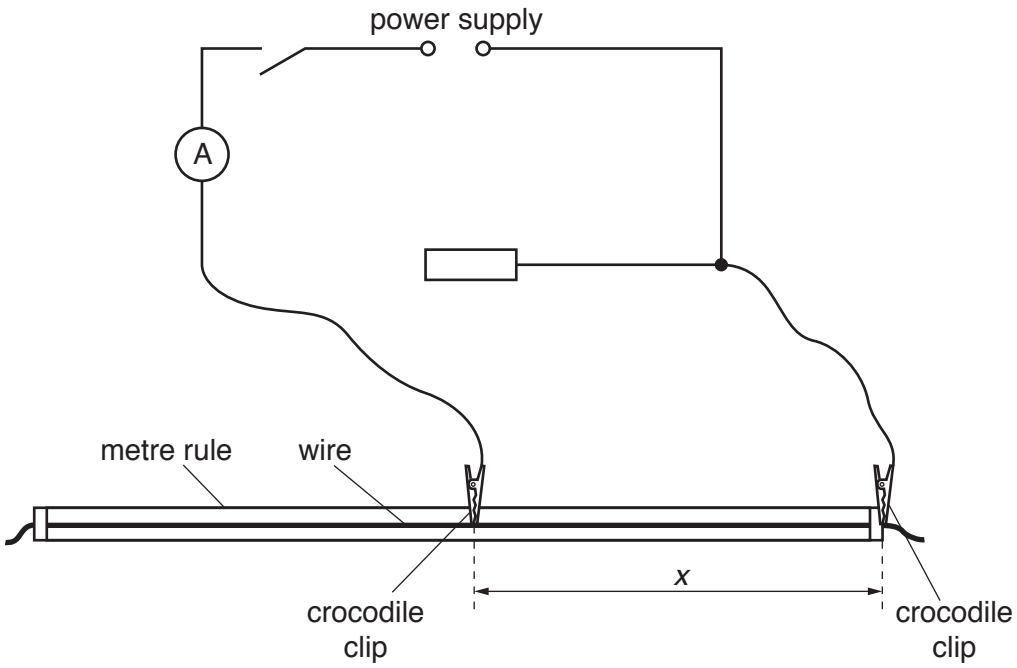

Fig. 1.1

The distance *x* between the crocodile clips should be approximately 40 cm.

(b) **(i)** Measure and record *x*.

x = ...

(ii) Close the switch.

(iii) Record the ammeter reading I_1.

I_1 = ...[1]

(iv) Open the switch.

(c) **(i)** Connect an additional lead L to the circuit as shown in Fig. 1.2.

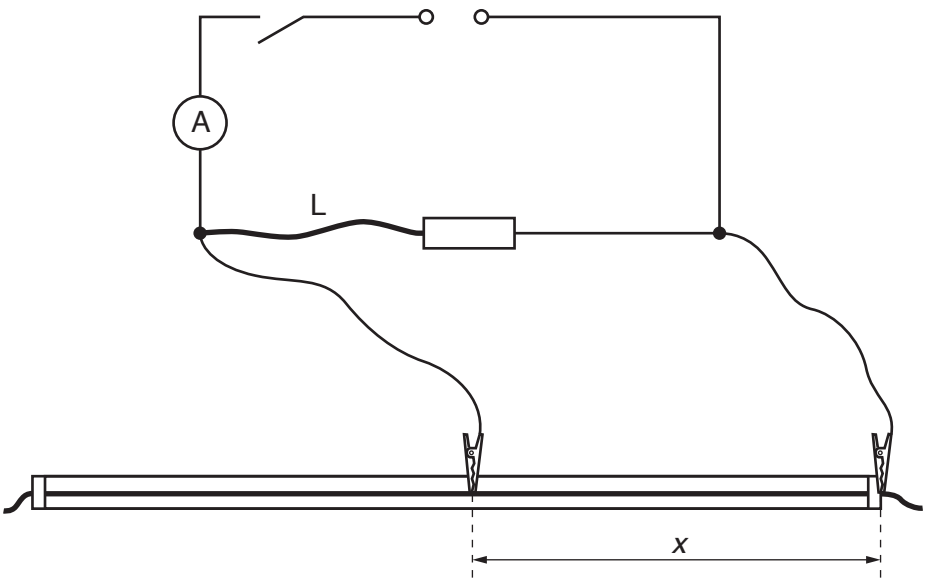

Fig. 1.2

(ii) Close the switch.

(iii) Record the ammeter reading I_2.

I_2 = ...[1]

(iv) Open the switch.

(v) Remove L. The circuit is now as shown in Fig. 1.1.

© UCLES 2017

(d) **Increase** *x* and repeat **(b)** and **(c)** until you have six sets of readings of *x*, I_1 and I_2.

Record your values in a table. Include values of $\frac{I_2}{I_1}$ in your table.

[10]

(e) **(i)** Plot a graph of $\frac{I_2}{I_1}$ on the *y*-axis against *x* on the *x*-axis. [3]

(ii) Draw the straight line of best fit. [1]

(iii) Determine the gradient and *y*-intercept of this line.

gradient = ...

y-intercept = ...

[2]

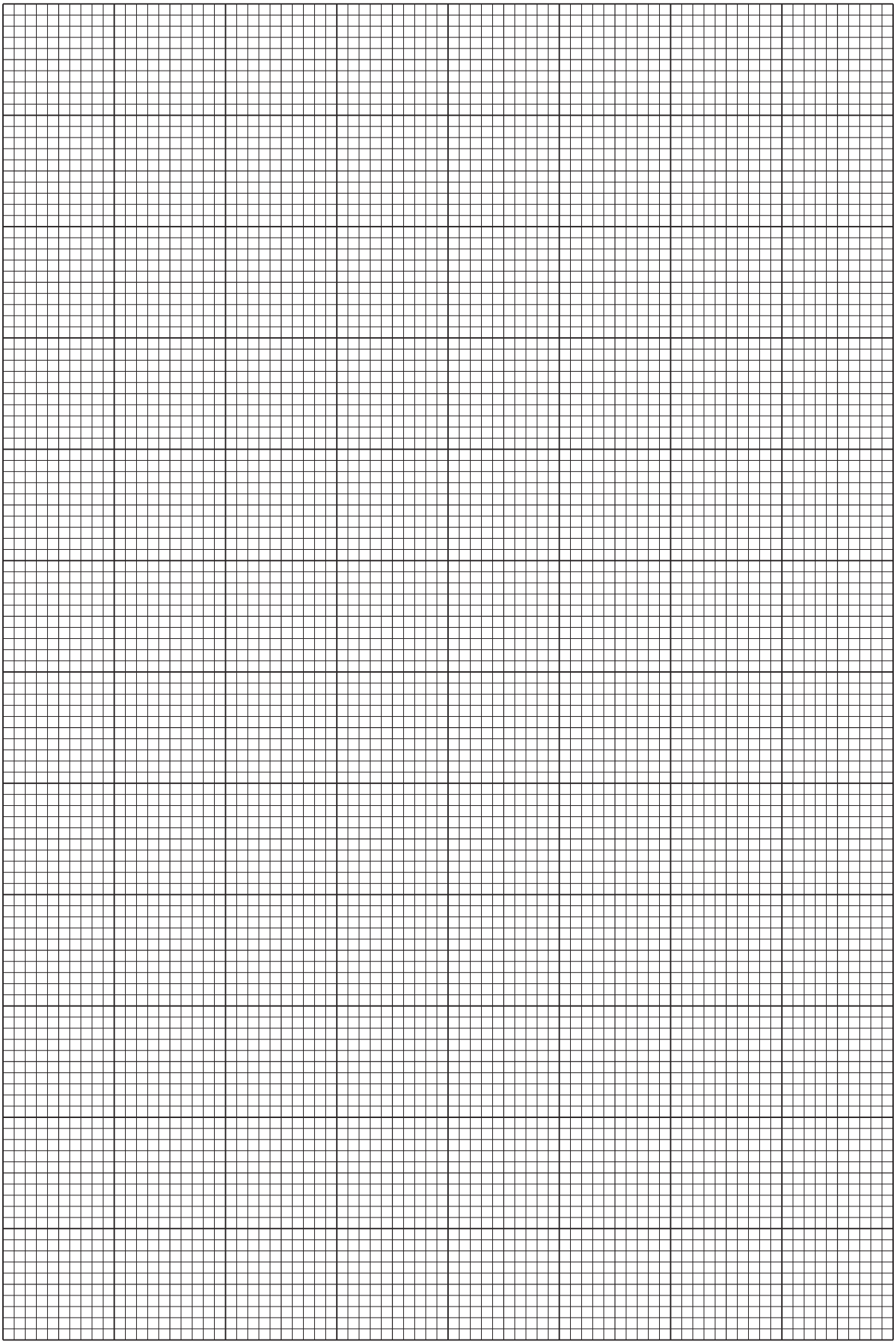

(f) It is suggested that the quantities I_1, I_2 and x are related by the equation

$$\frac{I_2}{I_1} = Px + Q$$

where P and Q are constants.

Using your answers in **(e)(iii)**, determine values for P and Q.
Give appropriate units.

P = ...

Q = ...

[2]

[Total: 20]

© UCLES 2017

You may not need to use all of the materials provided.

2 In this experiment, you will investigate the motion of oscillating table tennis balls.

(a) Tape each ball to a length of string. Ensure the total length of the string and ball is 35.0 cm, as shown in Fig. 2.1.

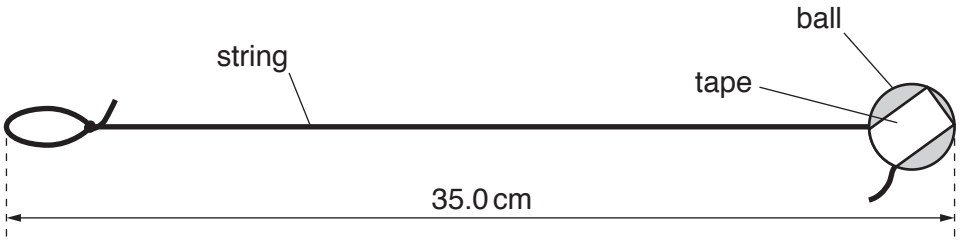

Fig. 2.1

(b) **(i)** Set up the apparatus as shown in Fig. 2.2.

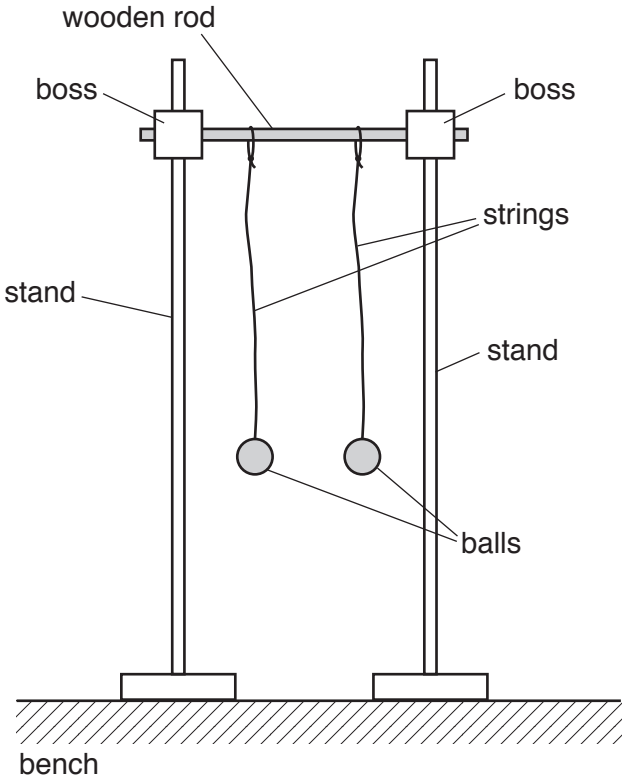

Fig. 2.2

(ii) Pull **one** of the balls towards you through a short distance.

Release the ball and determine the time for **five** complete oscillations.

time = ... s

Repeat for the other ball.

time = ... s [1]

(iii) Remove the balls and strings from the wooden rod.

(c) (i) Tape the **shorter** wooden block to one of the balls as shown in Fig. 2.3. Tape should be used on opposite sides of the block and the ball.

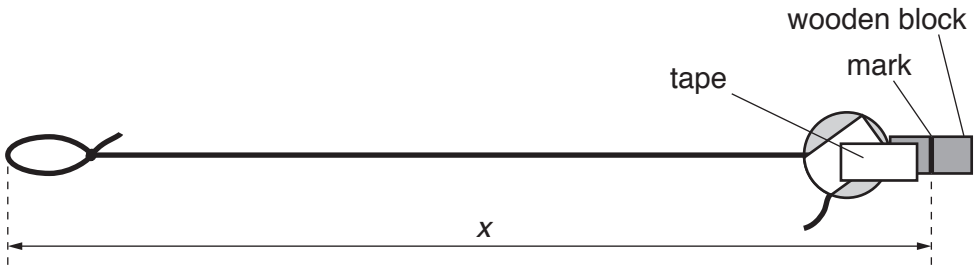

Fig. 2.3

The distance between the end of the string loop and the mark around the wooden block is *x*.

(ii) Measure and record *x*.

x = ...[1]

(iii) Estimate the percentage uncertainty in your value of *x*.

percentage uncertainty = ...[1]

(d) (i) Set up the apparatus as shown in Fig. 2.4.

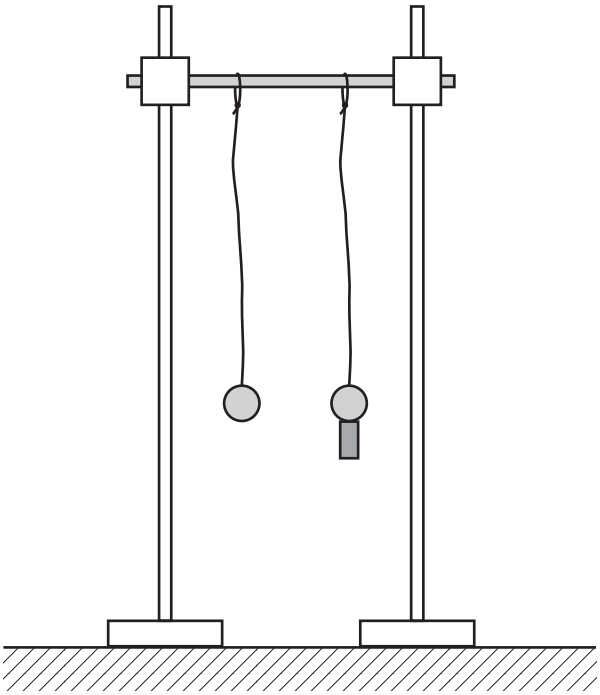

Fig. 2.4

(ii) Pull **both** balls towards you.

Release the balls at the same time and watch the movement.
The two balls will move backwards and forwards becoming out of phase.
After a time they will be back in phase so that they move towards you together.
The ball with the block attached completes *n* oscillations in this time.

(e) **(i)** Repeat **(d)(ii)** and record n.

$n =$ .....[2]

(ii) Calculate $\frac{(n+1)^2}{n^2}$.

$\frac{(n+1)^2}{n^2} =$ .....[1]

(f) Using the longer wooden block, repeat **(c)(i)**, **(c)(ii)**, **(d)** and **(e)**.

$x =$ .....

$n =$ .....

$\frac{(n+1)^2}{n^2} =$ .....
[3]

(g) It is suggested that the relationship between n and x is

$$\frac{(n+1)^2}{n^2} = kx$$

where k is a constant.

(i) Using your data, calculate two values of k.

first value of k = ...

second value of k = ...

[1]

(ii) Explain whether your results in **(g)(i)** support the suggested relationship.

.....

.....

.....

..... [1]

(h) The effective length of the pendulum formed by the ball and string is L.
Use your second value of k to calculate L using the relationship

$$k = \frac{1}{L}.$$

Give your answer to three significant figures.

L = ...[1]

(i) **(i)** Describe four sources of uncertainty or limitations of the procedure for this experiment.

1. .....

.....

2. .....

.....

3. .....

.....

4. .....

.....

[4]

(ii) Describe four improvements that could be made to this experiment. You may suggest the use of other apparatus or different procedures.

1. .....

.....

2. .....

.....

3. .....

.....

4. .....

.....

[4]

[Total: 20]

Permission to reproduce items where third-party owned material protected by copyright is included has been sought and cleared where possible. Every reasonable effort has been made by the publisher (UCLES) to trace copyright holders, but if any items requiring clearance have unwittingly been included, the publisher will be pleased to make amends at the earliest possible opportunity.

To avoid the issue of disclosure of answer-related information to candidates, all copyright acknowledgements are reproduced online in the Cambridge International Examinations Copyright Acknowledgements Booklet. This is produced for each series of examinations and is freely available to download at www.cie.org.uk after the live examination series.

Cambridge International Examinations is part of the Cambridge Assessment Group. Cambridge Assessment is the brand name of University of Cambridge Local Examinations Syndicate (UCLES), which is itself a department of the University of Cambridge.